FKOM/RM LUG ANSI - Butterfly valve

Gearbox operated Butterfly valve, version Lug ANSI

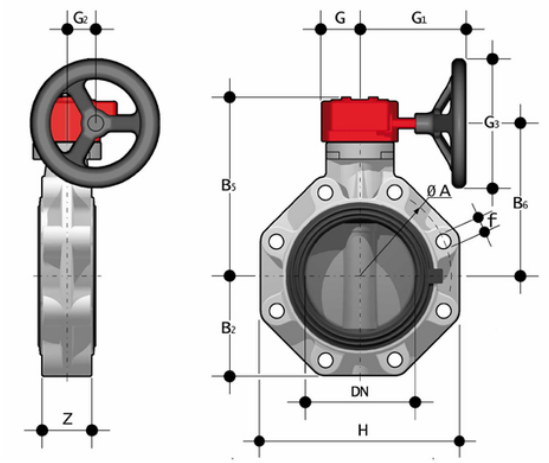

EPDM

Objednací číslo	d	DN	PN	product.detail.attribute.øA	product.detail.attribute.B[5:2]	product.detail.attribute.B[5:5]	product.detail.attribute.B[5
FKOALMRM212E	2" 1/2	65	10	140	80	174	146
FKOALMRM300E	3"	80	10	152	93	188	160
FKOALMRM400E	4"	100	10	191	107	202	174
FKOALMRM500E	5"	125	10	216	120	222	194
FKOALMRM600E	6"	150	10	241	134	235	207
FKOALMRM800E	8"	200	10	298	161	287	256
FKOALMRM810E	10"	250	6	362	210	317	281
FKOALMRM812E	12"	300	6	432	245	374	338

FKM

Objednací číslo	d	DN	PN	product.detail.attribute.øA	product.detail.attribute.B[5:2]	product.detail.attribute.B[5:5]	product.detail.attribute.B[5
FKOALMRM212F	2" 1/2	65	10	140	80	174	146
FKOALMRM300F	3"	80	10	152	93	188	160
FKOALMRM400F	4"	100	10	191	107	202	174
FKOALMRM500F	5"	125	10	216	120	222	194
FKOALMRM600F	6"	150	10	241	134	235	207

FKOM/RM LUG ANSI - Butterfly valve

Objednací číslo	d	DN	PN	product.detail.attribute.øA	product.detail.attribute.B[5:2]	product.detail.attribute.B[5:5]	product.detail.attribute.B[5
FKOALMRM800F	8″	200	10	298	161	287	256
FKOALMRM810F	10″	250	6	362	210	317	281
FKOALMRM812F	12″	300	6	432	245	374	338

FKOM/RM LUG ANSI - Butterfly valve

- **Ergonomic handle** in **HIPVC** equipped with **locking and unlocking device, release, quick operation and graduated adjustment** in 10 intermediate positions (DN 40÷200). The operating range, starting from the first few degrees of valve opening, also guarantees extremely low pressure drops.
- **Customisable Labelling System**: integrated module in the handle, made of a transparent protection plug and a customisable tag holder using the LSE set (available as an accessory). The **customisation** lets you **identify the valve on the system** according to specific needs.
- **STAINLESS steel square section stem** completely isolated from the fluid complying with standard ISO 5211: DN 40÷65: 11 mm DN 80÷100: 14 mm DN 125÷150: 17 mm DN 200: 22 mm DN 250÷400: 27 mm
- **Body in** polypropylene based **compound reinforced with fibreglass** (PP-GR) **resistant to UV rays** and characterised by **high mechanical strength.**
- **Drilling pattern using oval slots** that allow coupling to flanges according to numerous international standards. The special **self-centring inserts in ABS** supplied for DN 40÷200 guarantee the **correct axial alignment** of the valve during installation. For DN 250÷400 valves, the drilling pattern for the selfcentring system is of the traditional type according to DIN and ANSI standards.
- **Interchangeable liner** with the dual function of forming a hydraulic seal and isolating the body from the fluid.

- Interchangeable Disk in PP-H with through shaft, available in different thermoplastic materials: PVC-U, PVC-C, ABS, PVDF Overall dimensions of the valve in accordance with standard ISO 5752 (DN 40÷200 Medium series 25, DN 250÷ 300 Long Series 16) and DIN 3202 K2 and ISO 5752 (DN DN 65÷200 K2, DN 250÷300 K3) Can also be installed as an end line valve, bottom discharge valve or tank dump valve **Special Lug version** PN 10 fully drilled according to DIN 2501 or ANSI B16.5 cl.150 **with molded-in AISI 316 stainless steel threaded inserts Valve material compatibility** (PP-H) with water conveyance, drinking water and other food substances according to current **regulations** Possibility of installing a manual reducer or pneumatic and/or electric actuators by applying an ISO standard drilling PP-GR flanges. DN 40 ÷ 200 valve equipped with plate with rack in PP-GR. For actuated versions with flange drilled according to ISO 5211 F05, F07, F10. DN 250÷300 valve, fitted with one-piece top flange in high mechanical strength PP-GR with mounting flange for internal components drilled according to standard ISO 5211 F10 (excluding DN 350÷400), F12, F14. Possibility to have handle with integrated LSQT limit micro switch, even as a retrofit in existing installations