CMUIC/CP NO - PNEUMATICALLY ACTUATED COMPACT DIAPHRAGM VALVE DN 12:15

Pneumatically actuated diaphragm valve with unionised metric plain socket ends for solvent welding, Normally Open.

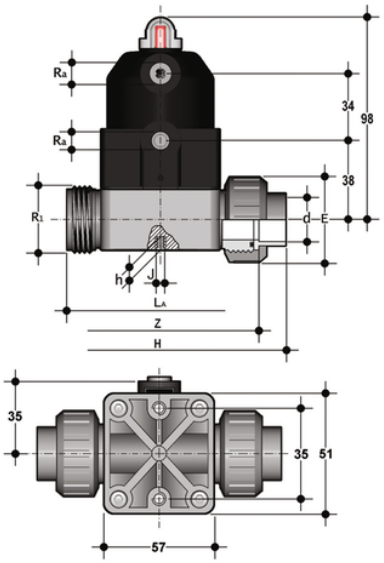

EPDM

Objednací číslo	d	DN	PN	E	product.detail.attribute.R1	product.detail.attribute.Ra	LA	Z	H	product.detail.attribute.h	product.detail.att
CMUICNO020E	20	15	6	41	1"	G 1/4"	90	97.5	129.5	8	M5

FKM

Objednací číslo	d	DN	PN	E	product.detail.attribute.R1	product.detail.attribute.Ra	LA	Z	H	product.detail.attribute.h	product.detail.att
CMUICNO020F	20	15	6	41	1"	G 1/4"	90	97.5	129.5	8	M5

PTFE

Objednací číslo	d	DN	PN	E	product.detail.attribute.R1	product.detail.attribute.Ra	LA	Z	H	product.detail.attribute.h	product.detail.att
CMUICNO020P	20	15	6	41	1"	G 1/4"	90	97.5	129.5	8	M5

CMUIC/CP NO - PNEUMATICALLY ACTUATED COMPACT DIAPHRAGM VALVE DN 12:15

The new compact and light piston actuator in PP-GR makes the CM/CP the ideal choice for applications requiring very frequent valve operation and a long valve lifetime.

- Compact and lightweight piston actuator in PP-GR, free of exposed metallic parts, particularly suited for use in severe environmental and chemically aggressive conditions.
- High strength IXEF piston guarantees high reliability over time without maintenance.
- High visibility graduated optical position indicator protected by a transparent cap with a seal O-Ring.

- The valve is impervious to fluids containing impurities
- It has an high flow rate
- It can be installed in any position
- It has an extremely compact structure
- It is actuated by a dry running piston and does not require maintenance
- It has no protruding screws and is fully free of impurity deposits
- Allows for an easy diaphragm seal replacement
- The Standard version valve comes with a position indicator.