TKDJV/CP SA - PNEUMATICALLY ACTUATED DUAL BLOCK® 3-WAY BALL VALVE

3 way DUAL BLOCK® ball valve with female ends, JIS series, Single-acting function. "T" ball, configuration 1

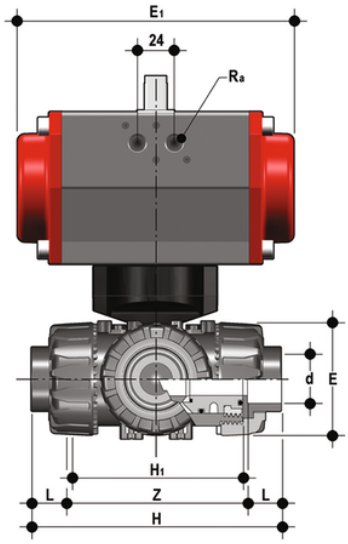

EPDM

Objednací číslo	d	DN	PN	E	H	product.detail.attribute.H1	L	Z	product.detail.attribute.Ra	B	product.detail.attrib
TKDJVSA012E1	1/2"	15	16	54	146	80	30	86	G1/8"	145	29
TKDJVSA034E1	3/4"	20	16	65	177	100	35	107	G1/4"	156.5	34.5
TKDJVSA100E1	1"	25	16	73	196	110	40	116	G1/4"	161	39
TKDJVSA114E1	1" 1/4	32	16	86	225	131	44	137	G1/4"	194	46
TKDJVSA112E1	1" 1/2	40	16	98	267.2	148	55	157.19999999999999	G1/4"	200	52
TKDJVSA200E1	2"	50	16	122	316	179	63	190	G1/4"	217	62

FKM

Objednací číslo	d	DN	PN	E	H	product.detail.attribute.H1	L	Z	product.detail.attribute.Ra	B	product.detail.attrib
TKDJVSA012F1	1/2"	15	16	54	146	80	30	86	G1/8"	145	29
TKDJVSA034F1	3/4"	20	16	65	177	100	35	107	G1/4"	156.5	34.5
TKDJVSA100F1	1"	25	16	73	196	110	40	116	G1/4"	161	39
TKDJVSA114F1	1" 1/4	32	16	86	225	131	44	137	G1/4"	194	46
TKDJVSA112F1	1" 1/2	40	16	98	267.2	148	55	157.19999999999999	G1/4"	200	52

TKDJV/CP SA - PNEUMATICALLY ACTUATED DUAL BLOCK® 3-WAY BALL VALVE

Objednací číslo	d	DN	PN	E	H	product.detail.attribute.H1	L	Z	product.detail.attribute.Ra	B	product.detail.attrib
TKDJVSA200F1	2"	50	16	122	316	179	63	190	G1/4"	217	62

TKDJV/CP SA - PNEUMATICALLY ACTUATED DUAL BLOCK® 3-WAY BALL VALVE

In addition to the manually actuated version, TKD is also available in TKD/CE electrically actuated and TKD/CP pneumatically actuated configurations. Actuators are firmly connected to the valve by the special FIP Power Quick modules fully made of PP-GR technopolymer. TKD/CE and TKD/CP are constructed with actuators meeting current regulations and selected by FIP according to their quality and reliability requirements. The efficiency of these valves, tested according to the company's quality standards, is guaranteed by the expertise and know-how that FIP dedicates to manufacturing its products.

- Electric actuator constructed according to FIP specifications; with plastic shell and standard emergency override. Available with voltages from 12 to 240V.
- Rack & pinion type pneumatic actuator constructed according to FIP specifications: fully protected against weather corrosion available in double-acting (DA) or simple-acting normally closed (NC) or normally open (NO) versions. Three different positions according to 2 configurations are possible with T ball: 0°-90°-180° and 0°-90°-270°.
- High surface finish stem with double O-Ring. The double connection key system guarantees solid and reliable actuator torque transmission to the ball.
- Easy to install PowerQuick module for pneumatic or electric actuator fully made of highly robust technopolymer.
- DUAL BLOCK® patented lock system that ensures union nut tightening hold even in severe conditions such as vibrations or heat dilation.
- Ball shutter high surface finish with floating type full passage with T or L port.

- Joint system for solvent welding (PVC-U and PVC-C only), for welding (PP-H only), for threading
- Patented SEAT STOP® ball seat carrier system that lets you micro-adjust ball seats and minimise axial force effects
- Easy radial disassembly allowing quick replacement of O-rings and ball seats without any need for tools
- Radial dismounting valve body (True Union) made for PVC-U, PVC-C and PP-H injection moulding equipped with built-in bores for actuation. ISO 9393 compliant test requisites
- Option of disassembling downstream pipes with the valve in the closed position
- High surface finish stem with double O-Ring and double connection key to the ball, equipped with visual ball position indicator for correct handle installation
- Integrated bracket for valve anchoring
- Possibility of installing pneumatic and/or electric actuators thanks to the robust anchor tower for easy and quick automation using the Power Quick module.